	TYPE	SIZE	DIMENSIONS 106-117	
Blackmer A DOVER COMPANY	STUFFING BOX DIMENSIONS	ML4	Section Effective Replaces Page 1 / 1	106 October 2004 NEW

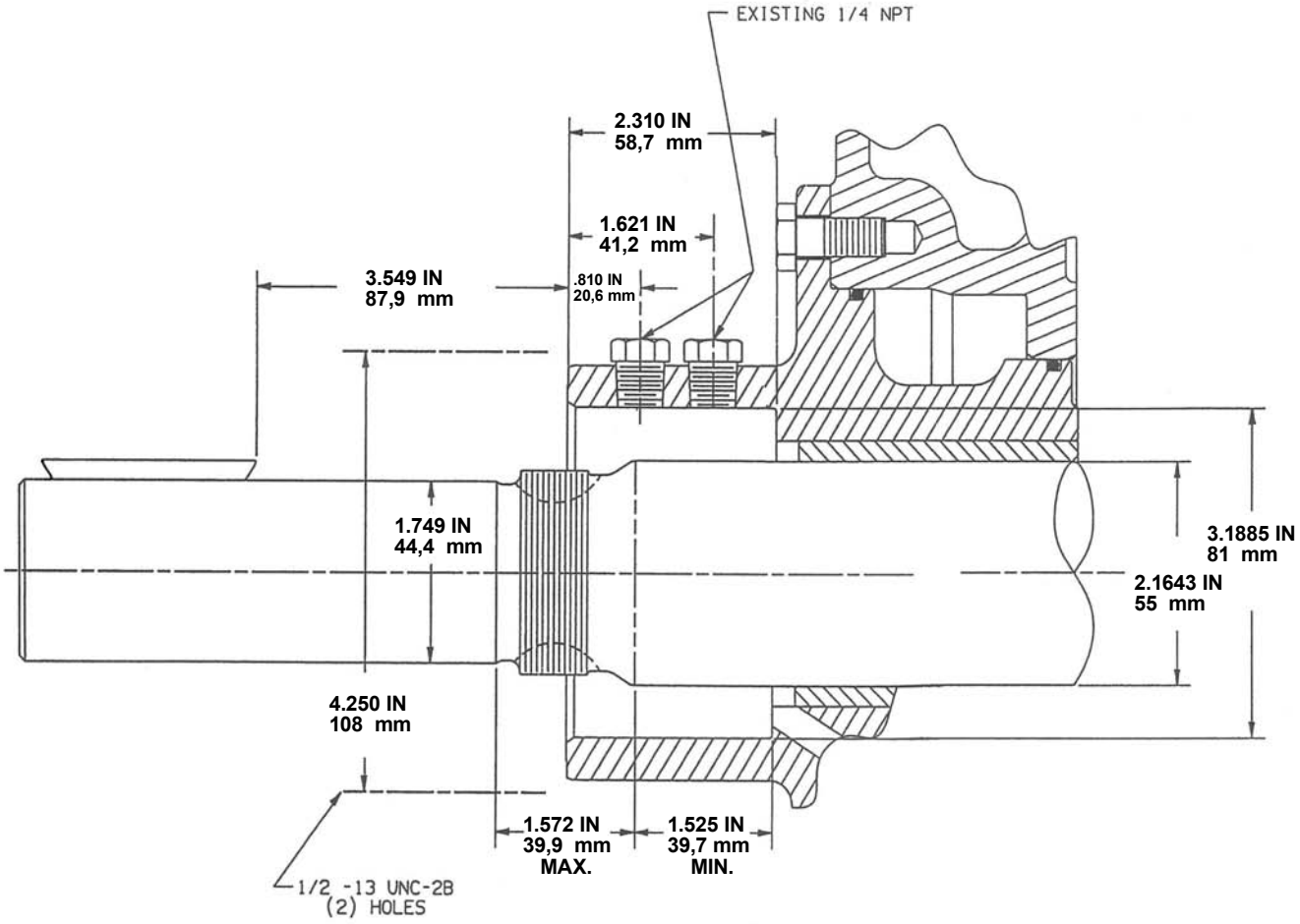

KI Pumps & Systems, Inc., 206 Enterprise Road, P.O. Box 180287, Delafield, WI 53018-1768
TEL (888) 547 8678 FAX (262) 547 8678 info@kipumps.com www.blackmerpumps.com