BLACKMER PARTS LIST
PUMP MODEL: TX4A

PARTS LIST 201-A05

Section	201
Effective	Sept 2007
Replaces	Jan 2007

See Instructions 201-A00 for Installation, Operation and Maintenance

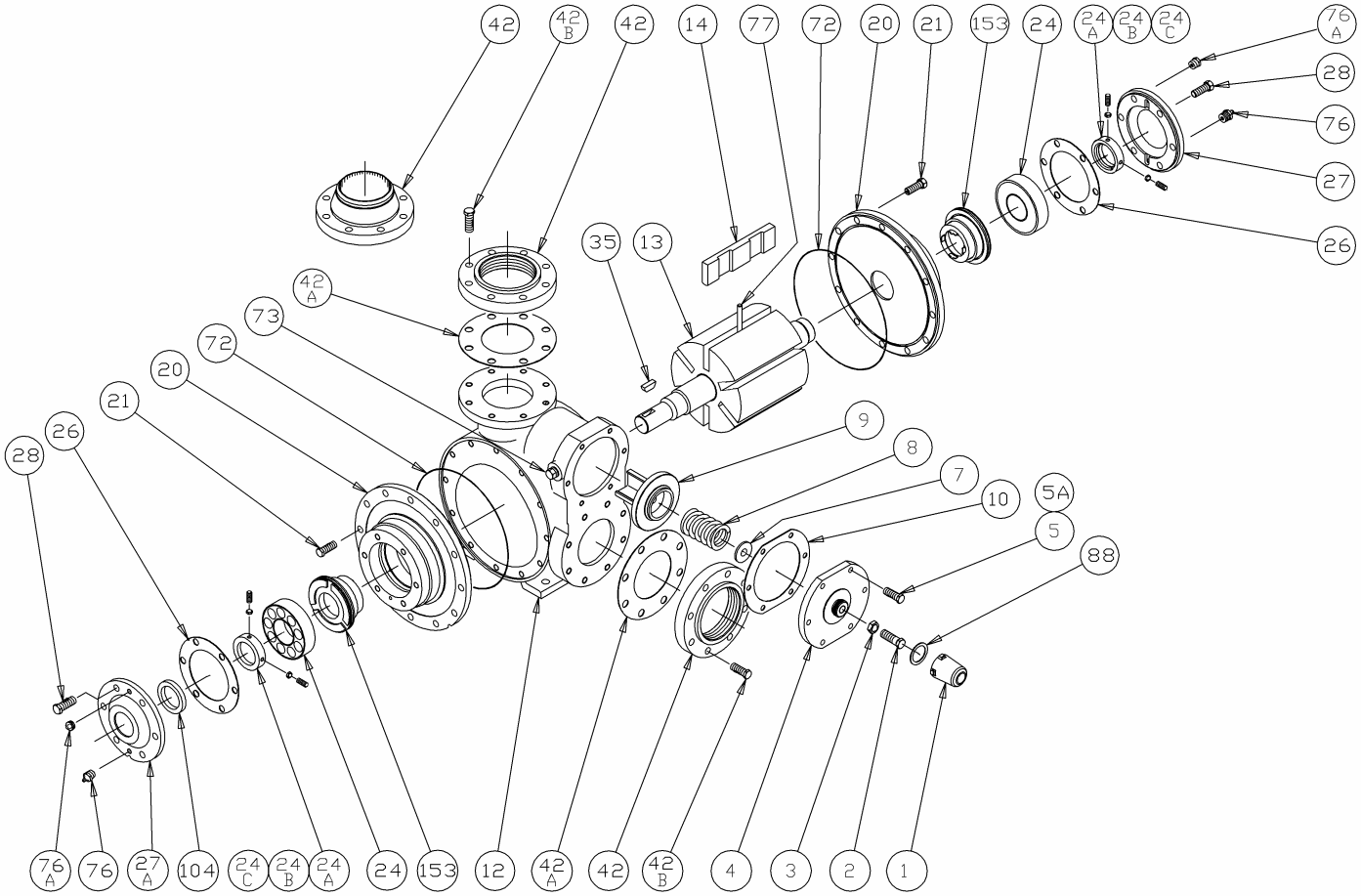

Ref. No.	Description	Parts Per Pump	Part No.	Ref. No.	Description	Parts Per Pump	Part No.
1	Cap – Relief Valve (R/V)	1	413957	24B	Setscrew	4	[1] 922104
2	Adjusting Screw – R/V	1	436307	24C	Jam Nut	4	[1] 922923
3	Locknut – Adjusting Screw	1	436355	26	Gasket – Bearing Cover	2	[1] 386950
4	Cover – R/V	1	411903	27	Bearing Cover – Outboard	1	041905
5	Capscrew – R/V Cover	5	920351	27A	Bearing Cover – Inboard	1	041903
5A	Capscrew w / Hole – R/V Cover	1	920348	28	Capscrews – Bearing Cover	12	920491
7	Spring Guide – R/V	1	426355	35	Key – Shaft	1	[1] 909135
8	Spring, Steel – R/V (35-50 psi)	1	476303	42	Flange – 4" NPT	1-2	651900
	Spring, Steel – R/V (51-75 psi)		476310		Flange – 4" Weld		651905
	Spring, Steel – R/V (76-125 psi)(Std.)		476305	42A	Gasket – Flange	2	[1] 381903
9	Valve – R/V (Std.)	1	456315	42B	Capscrew – Flange	16	920532
	Valve – R/V (Nickel Plated)		456300	72	O-Ring – Head (Buna-N) (Std)	2	[1] 702023
10	Gasket – R/V Cover	1	[1] 531903		O-Ring – Head (FKM)		702024
12	Cylinder	1	021906		O-Ring – Head (PTFE)		702093
13	Rotor & Shaft	1	261950	73	Gage Plug	2	908198
14	Vane – Duravane	6	[1] 091924	76	Grease Fitting	2	317815
20	Head	2	031908	76A	Grease Relief Fitting	2	701992
21	Capscrews – Head	24	920510	77	Push Rod	3	[1] 121905
24	Ball Bearing	2	[1] 903182	88	Gasket – R/V Cap	1	[1] 533908
24A	Lock Collar – Bearing	2	[1] 721937	104	Grease Seal	1	[1] 904190
					Kit - Maintenance		898953

[1] Included in Maintenance Kit

Keep this parts list with Installation, Operation and Maintenance Instructions.

KI Pumps & Systems, Inc., 206 Enterprise Road, P.O. Box 180287, Delafield, WI 53018-1768
TEL (888) 547 8678 FAX (262) 547 8678 info@kipumps.com www.blackmerpumps.com

MECHANICAL SEALS – TX4A MODELS

REF. NO.	PART NAME	PARTS PER PUMP	PART NO.
153	Mechanical Seal Complete – **Std.** Cast Iron Stationary Seat, Carbon Seal Face, Buna-N O-Rings. (INCN)	2	[1] 336958
	Mechanical Seal Complete - Cast Iron Stationary Seat, Carbon Seal Face w/ FKM O-Rings. (IVCV)		336982
	Mechanical Seal Complete - Cast Iron Stationary Seat, PTFE O-Ring, Carbon Seal Face w/ PTFE Seal Ring. (IACT)		331973
	Mechanical Seal Complete - Cast Iron Stationary Seat, Bronze Seal Face w/ FKM O-Rings. (IVBV)		336984
153D	O-Ring - Stationary (Buna-N)	2	701945
	O-Ring - Stationary (FKM)		711932
	O-Ring - Stationary (PTFE)		702090
153L	O-Ring - Rotating (Buna-N)	2	701933
	O-Ring - Rotating (FKM)		701967
	Seal Ring - Rotating (PTFE)		**

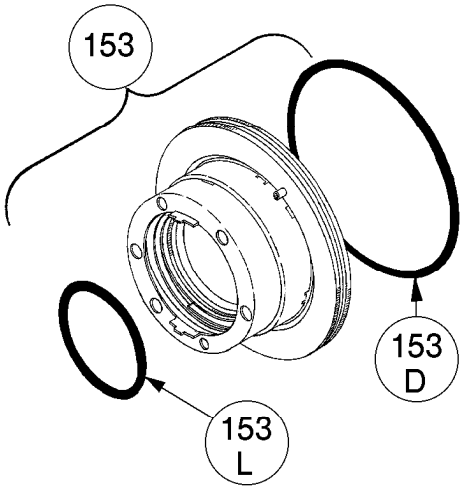

[1] Included in Maintenance Kit

****** PTFE Rotating Seal Ring is not available as a separate part.

KI Pumps & Systems, Inc., 206 Enterprise Road, P.O. Box 180287, Delafield, WI 53018-1768
TEL (888) 547 8678 FAX (262) 547 8678 info@kipumps.com www.blackmerpumps.com